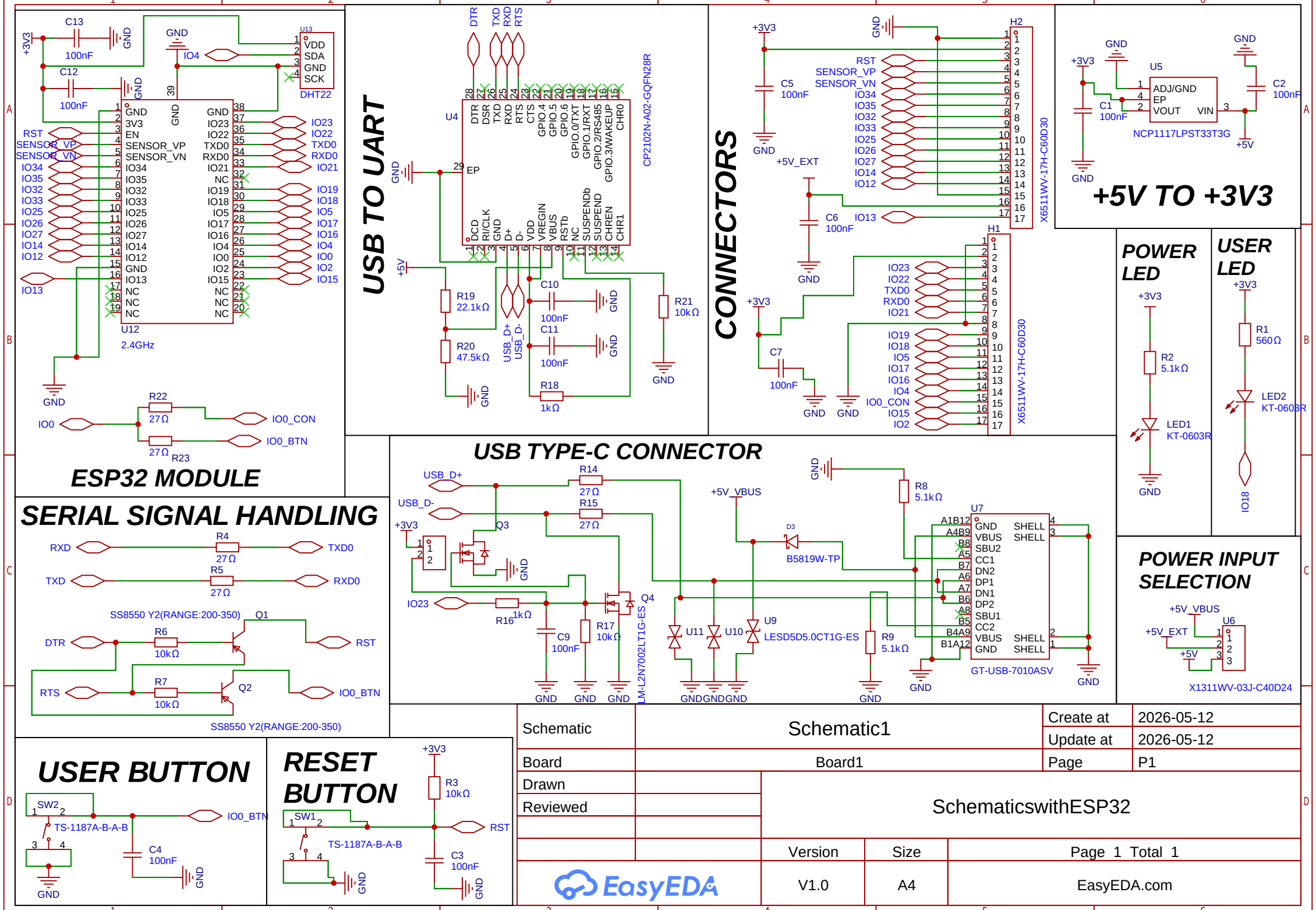
ESP32 MODULE
U12
2.4GHz
U13
DHT22
USB TO UART
U4
CP2102N-A02-GQFN28R
CONNECTORS
H2
H1
X6511WV-17H-C60D30
+5V TO +3V3
U5
NCP1117LPST33T3G
POWER LED
USER LED
USB TYPE-C CONNECTOR
U7
GT-USB-7010ASV
POWER INPUT SELECTION
U6
X1311WV-03J-C40D24
SERIAL SIGNAL HANDLING
SS8550 Y2(RANGE:200-350)
USER BUTTON
TS-1187A-B-A-B
RESET BUTTON
Schematic
Schematic1
Board
Board1
Drawn
Reviewed
Create at
2026-05-12
Update at
2026-05-12
Page
P1
SchematicswithESP32
Version
Size
Page 1 Total 1
V1.0
A4
EasyEDA
EasyEDA.com